24″ CAPE BRETON FREE STANDING VANITY

TOP VIEW

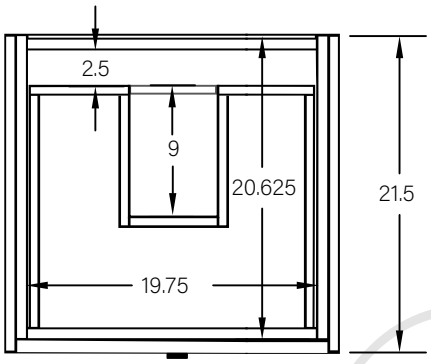

FRONT VIEW

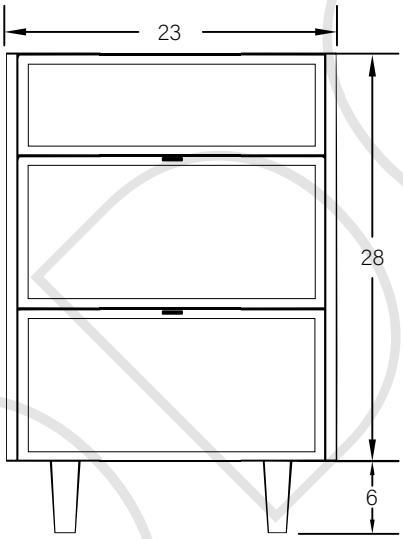

SIDE VIEW

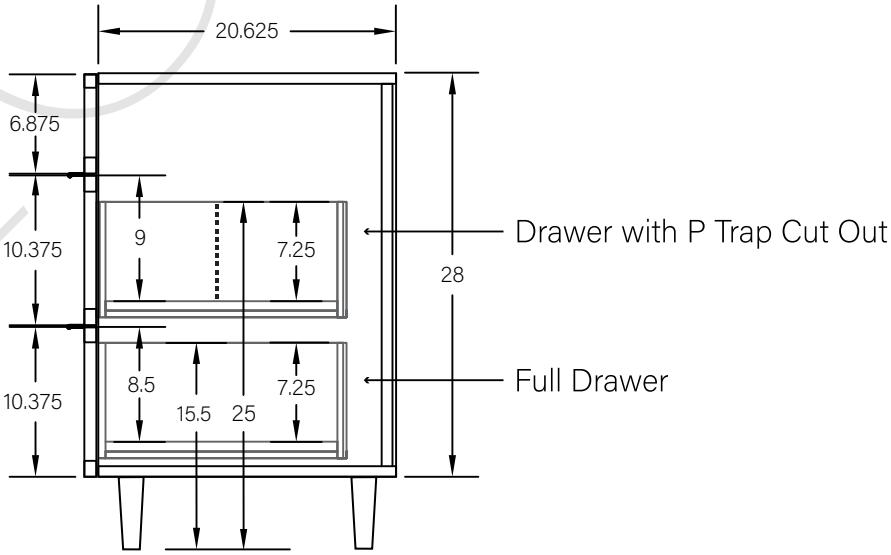

TEODOR®