30″ SLIM CAPE BRETON FREE STANDING VANITY

TOP VIEW

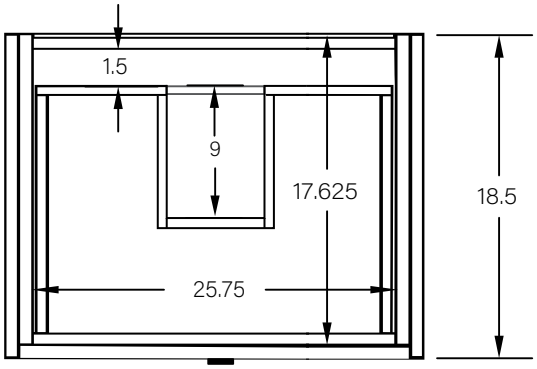

FRONT VIEW

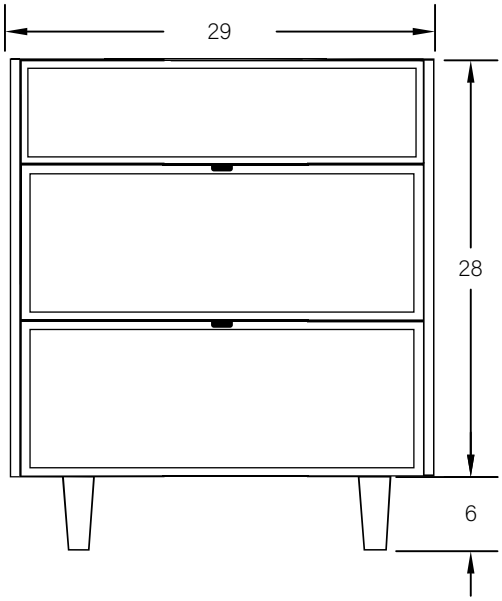

SIDE VIEW

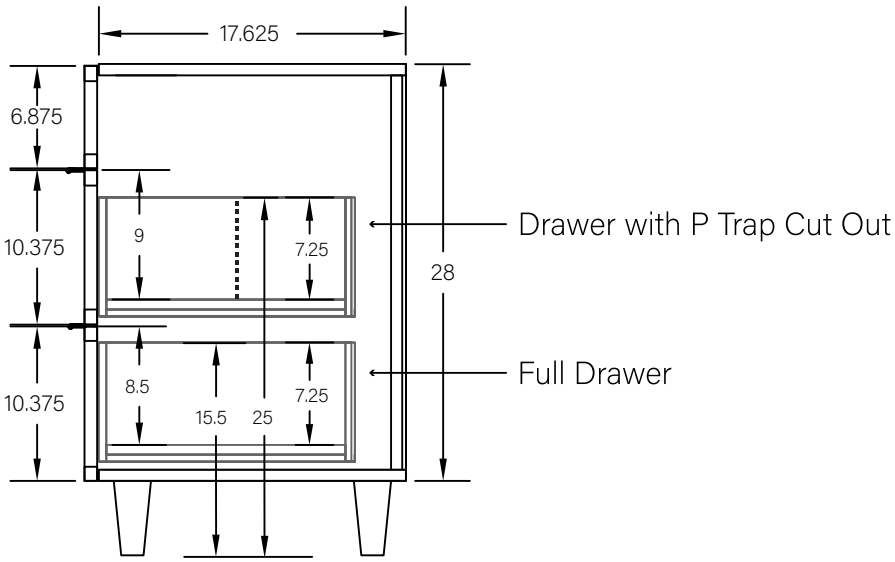

TEODOR

1-888-807-2323 | info@teodorvanities.com